MS56B-2 0,12KW 230/400V B3/B14

Three-phase asynchronus motor in aluminium

Motor type	MS56B-2 0,12KW 230/400V B3/B14
Brand	BUSCK
Item number	03020575

Voltage V	Power kW	Frequency Hz	Current A	Speed rpm
230	0,12	50	0,70	2730
400	0,12	50	0,40	2730
460	0,14	60	0,40	3276

Duty	S1
Enclosure	IP55
Insulation class	F
Cooling	IC411 (TEFC)
Max. ambient temp.	40°C
Min. ambient temp.	-20°C
Max. temp. rise	80 K
Max altitude, masl	1000
Torque, Nm	,42
Starting torque ratio	2,2
Pull up torque ratio	1,6
Pull out torque ratio	2,4
Starting current ratio	6
Balance grade	Normal
Inertia kgm2	0,00012

Efficiency, load 100%	62
Power fact, load 100%	0,69
Painting	Standard
Color	RAL 9005
Weight kg	4
Sound pressure Lp dB(A)	58
Bearing DE	6201-2Z
Bearing NDE	6201-2Z
Cable entries	1xM16

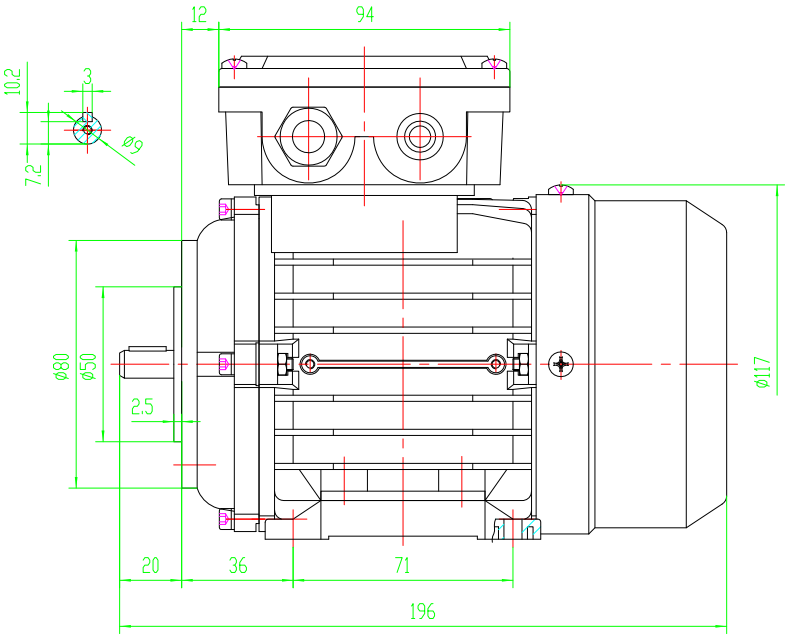

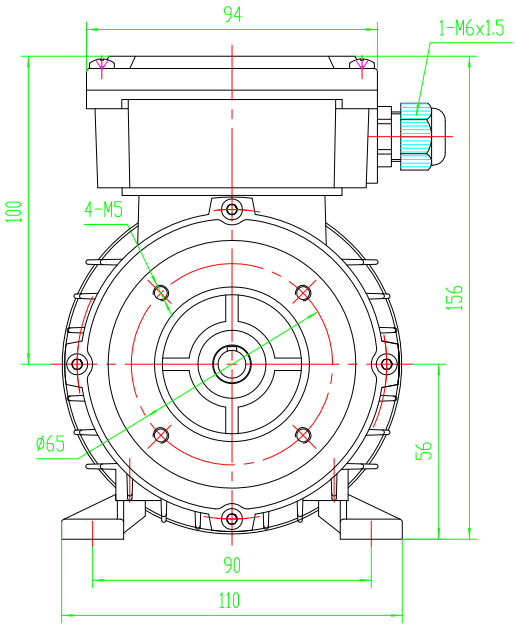

BUSCK
www.busck.eu

Busck & Co AB
Gamla Riksvägen 14
428 32 Göteborg
Sweden
556027-1990
info@busck.se

Busck & Co ApS
Postboks 108
0900 København C
Denmark
info@busckco.dk

Busck AS
Postboks 346
N-1401 Ski
Norway
info@busck.no